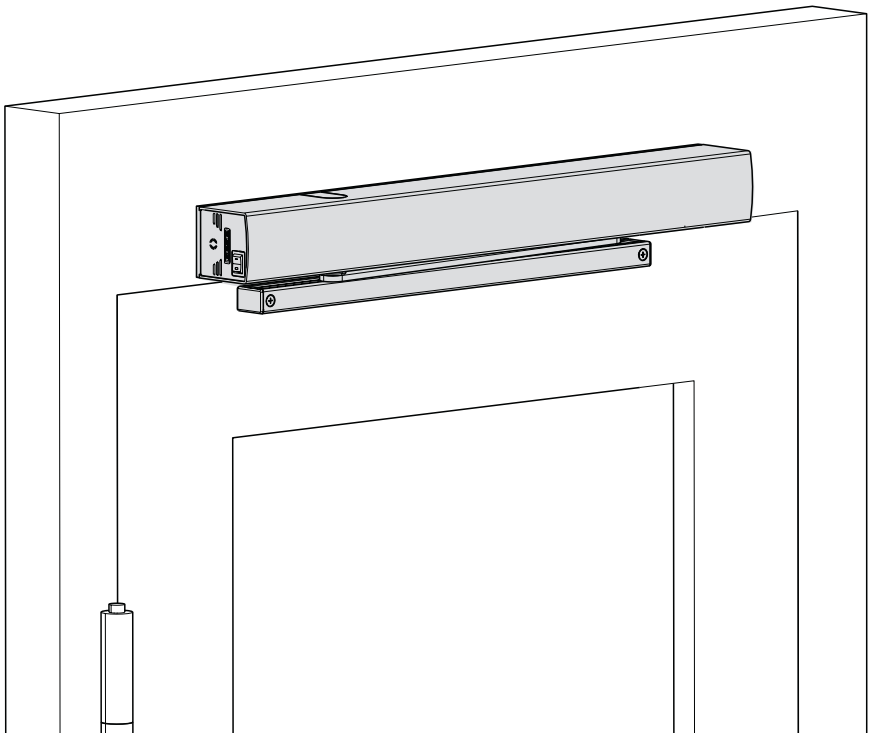

ECturn

GB Mounting instructions

GEZE

Contents

1 Symbols and means of representation

Warnings
In these instructions, warnings are used to warn against material damage and injuries.
- ▶ Always read and observe these warnings.
- ▶ Observe all the measures that are marked with the warning symbol and warning word.

Warning symbol	Warning word	Meaning
⚠	**WARNING**	Danger for persons. Non-compliance can result in death or serious injuries.
⚠	**CAUTION**	Danger for persons. Non-compliance can result in minor injuries.
–	**CAUTION**	Information on avoiding material damage, understanding a concept or optimising the processes.

Further symbols and means of representation
Important information and technical notes are emphasised in order to illustrate the correct operation.

Symbol	Meaning
!	means "important note"
i	means "additional information"
▶	Symbol for an action: Here you have to do something. ▶ Observe the sequence if there are several action steps.

2 Product liability

In accordance with the liability of the manufacturer for his products as defined in the German "Produkthaftungsgesetz" (Product Liability Act), the information contained in this brochure (product information and proper use, misuse, product performance, product maintenance, obligations to provide information and instructions) is to be observed. Non-compliance releases the manufacturer from his statutory liability.

3 Safety

3.1 Intended use

The ECturn swing door drive is designed for the automatic opening and closing of swing-door single action doors.
The ECturn swing door drive is suitable:
- solely for use in dry rooms
- in entrances and interior areas of pedestrian traffic in commercial plants and public areas
- in private areas.

The ECturn swing door drive
- may not be used at fire or smoke proof doors,
- may not be used for hazardous areas.

Any other use than the proper use, such as permanent manual operation, as well as all changes to the product are impermissible.

3.2 Safety instructions

- The prescribed mounting, maintenance and repair work must be performed by properly trained personnel authorised by GEZE.
- The country-specific laws and regulations are to be observed during safety-related tests.
- GEZE shall not be liable for injuries or damage resulting from unauthorised modification of the system.
- GEZE shall not be liable if products from other manufacturers are used with GEZE equipment.
- Only original GEZE parts may be used for repair and maintenance work as well.
- The connection to the power supply must be made by a professional electrician. Perform the power connection and safety earth conductor test in accordance with DIN VDE 0100-610.
  Exception: If the ECturn swing door drive is connected to the mains voltage by the mounted power plug, the connection does not have to be carried out by a qualified electrician.
- Use a customer-accessible 10-A automatic circuit-breaker as the line-side disconnecting device.
- Observe the latest versions of guidelines, standards and country-specific regulations, in particular:
  - ASR A1.7 “Doors and Gates”
  - DIN 18650 "Building hardware - Powered pedestrian doors"
  - VDE 0100; Part 610 "Erection of low-voltage installations"
  - Accident-prevention regulations, especially BGV A1 "General regulations" and BGV A2 "Electrical systems and equipment"
  - VDE 0100-610 "Erection of low-voltage installations"

3.3 Safety-conscious working

- Secure the workplace against unauthorized entry.
- Use only cables prescribed in the cable plan. Lay screening in accordance with the wiring diagram.
  Secure loose, internal drive cables with cable ties.
- Before working on the electrical system:
  - Disconnect the drive from the 230 V mains network and check to ensure that it is deenergised.
  - Disconnect the controller from the 24 V battery.
  - Note that the system will still be supplied with power, despite the fact that the power supply is disconnected, if an uninterruptible power supply (UPS) is used.
- Always use insulated wire-end ferrules for wire cores.
- Attach safety labels to glass door leaves.
- Danger of injury by broken glass!
- Danger of injury by sharp edges in the drive!

3.4 Inspection of the mounted system

Safety analysis (danger analysis)
In accordance with Machine Directive 2006/42/EC and DIN 18650, a danger analysis must be performed and the door system identified in accordance with CE Identification Directive 98/68/EEC before commissioning the door system.
This includes:
- Checking measures for security and prevention of crushing, impact, shearing or drawing-in spots.
- Checking the function of the safety and actuation sensors.
- Checking the protective conductor connection to all metal parts which can be touched.

3.5 Additionally applicable documents

Drawing No.	Type
70107-9-0951	ECturn wiring diagram
70107-9-0962	ECturn cable plan

The diagrams are subject to change. Use only the most recent versions.

4 Transportation and storage

CAUTION!
Damage to the ECturn swing door drive through hard knocks and falls!
▶ Do not throw or let drop the ECturn.

- Store dry. Protect from moisture during transportation and storage.
- Storage temperatures under –30 °C and over + 60 °C can result in damage to the device.

5 Tools and aids

Tool	Size
Tape measure	–
Marking pen	–
Set of Allen keys	–
Screwdriver set	Slotted 3 mm, crosstip
Side-cutting pliers	–
Crimping pliers for cables	–
Wire stripper	–
Multimeter	–
Display programme switch (Mat. No. 103940)	–

6 Product description

6.1 System description and technical data

The ECturn is a swing door drive operating fully automatically that is actuated by sensors or switches.
The ECturn operates electrically during opening and closing.

ECturn field of application

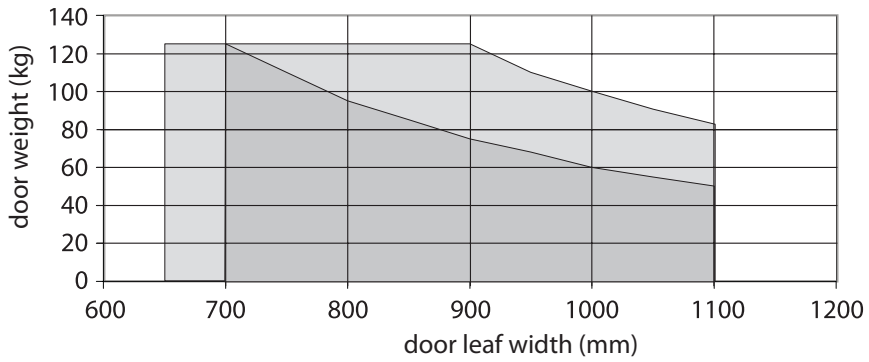

Light grey Low energy Dark grey Automatic

Mechanical data

- Dimensions (H x D x L): 60 mm x 60 mm x 580 mm
- Ambient temperature range: –15 °C to +50 °C
- Drive mass: approx. 3 kg

Electrical data

- Mains connection: 110–230 V AC +10% –14%, 50/60 Hz
- Power consumption: max. 75 W
- Externally connectable devices: 24 V DC, max. 600 mA

6.2 Basic structure and extension

6.2.1 Drive

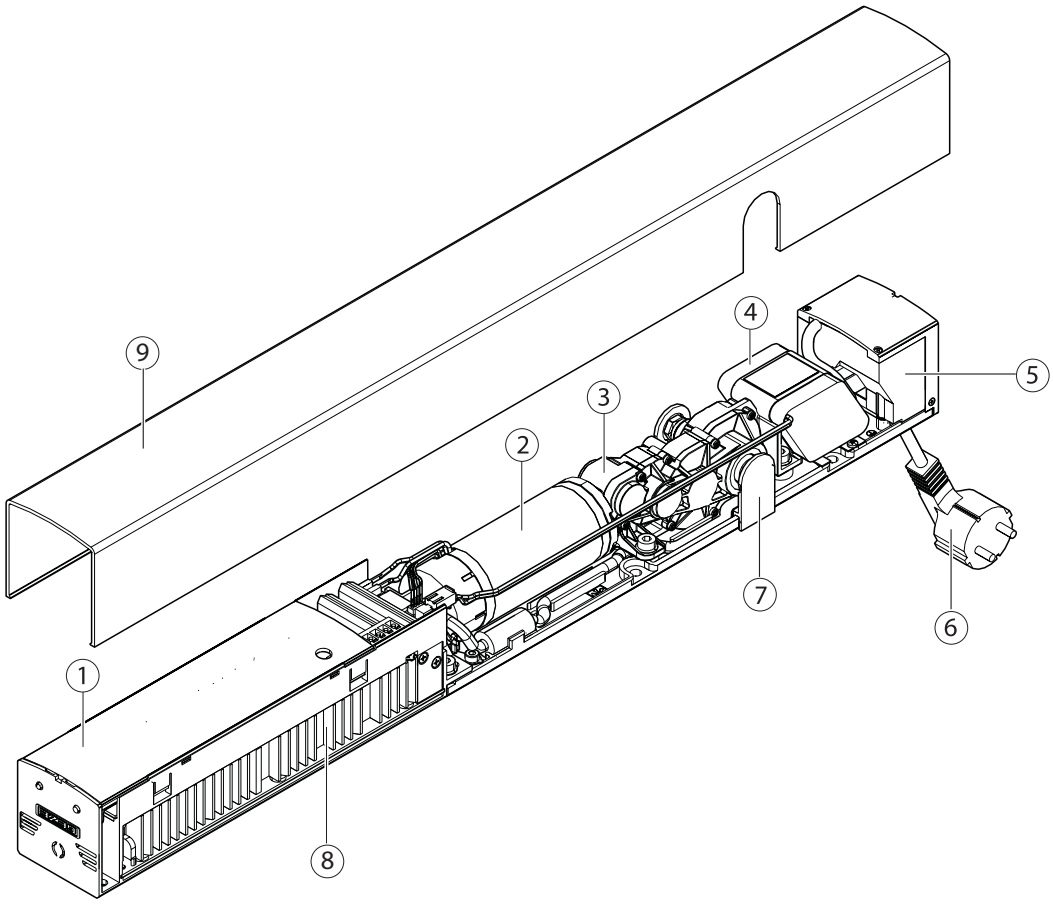

1 Controller cover
2 Motor
3 Gearing
4 Battery (optional)
5 Power connection (in the side element)
6 Power plug
7 Spindle cover
8 Controller with power pack
9 Hood (optional)

6.2.2 Height-adjustable guide rail (±2 mm)

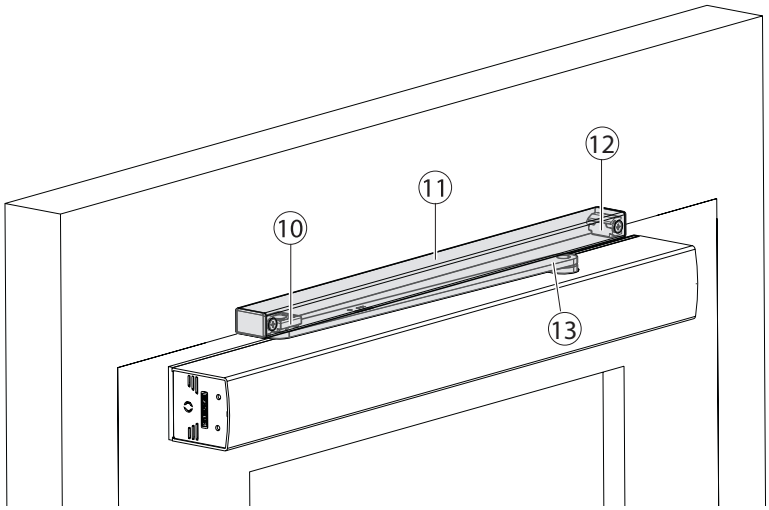

10 Slide block
11 Rail
12 End piece
13 Lever

6.2.3 Link arm

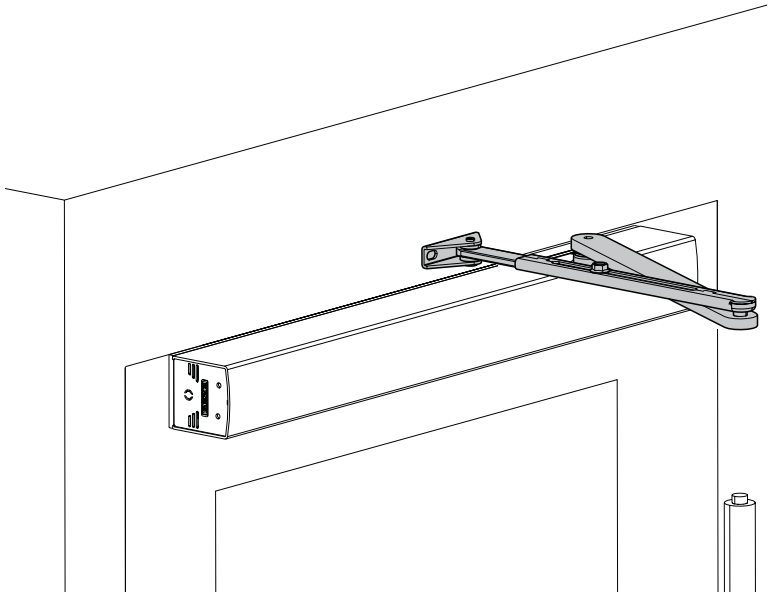

For soffit depth SD:
- 0 … 100 mm
- 90 … 200 mm

6.2.4 Mounting plate for drives (optional)

Depending on the installation situation a mounting plate is required. A mounting plate is generally recommended to facilitate mounting.

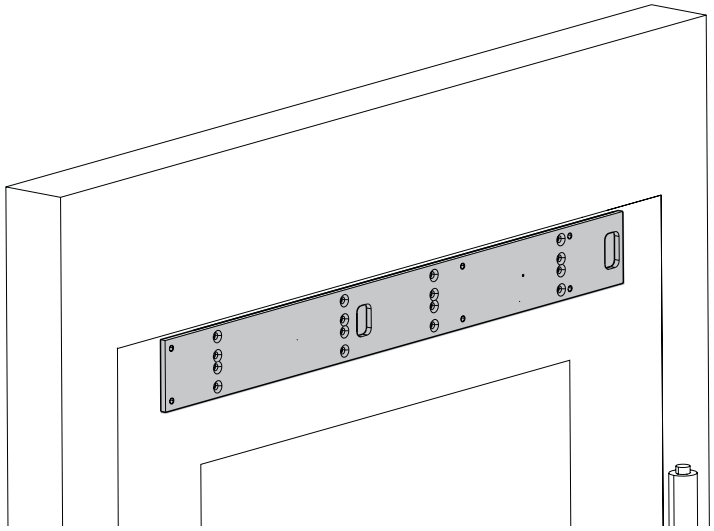

6.2.5 Actuation elements (accessories)

In accordance with the specifications in the wiring diagram, Mat. No. 134079

7 Types of mounting, stops

The opening angle of the door has to be limited by a door stop.
Accessories: Door stop buffer, integrated opening restrictor (only for guide rail).

The ECturn allows the following types of stop, each for doors DIN left and doors DIN right:

Hinge side

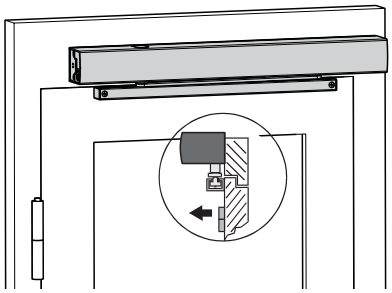

Transom mounting hinge side
with guide rail
max. soffit depth SD: 40 mm
max. door overlap O: 40 mm

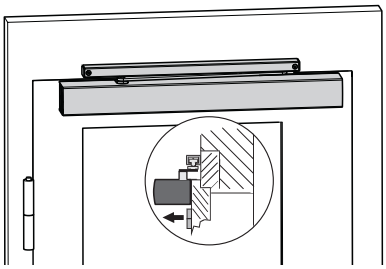

Door panel mounting hinge side
with guide rail
max. door overlap O: –50…+30 mm

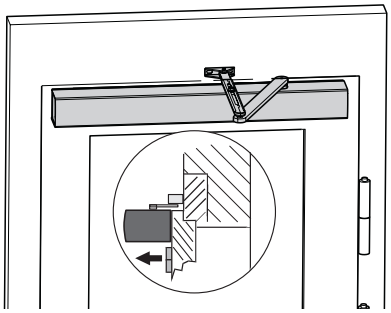

Door panel mounting hinge side
with link arm
max. door overlap O: 200 mm

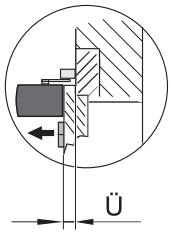

O Door overlap

Opposite hinge side

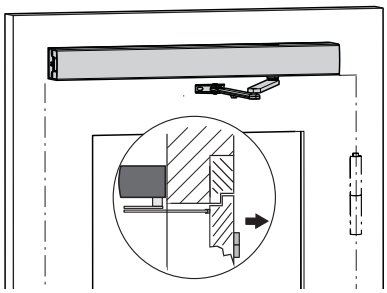

Transom mounting opposite hinge side
with link arm for
soffit depths SD: 0…100 mm
90…200 mm

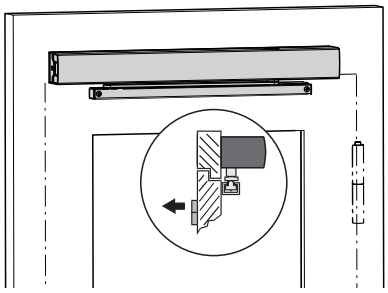

Transom mounting opposite hinge side
with guide rail
max. soffit depth SD: 30 mm

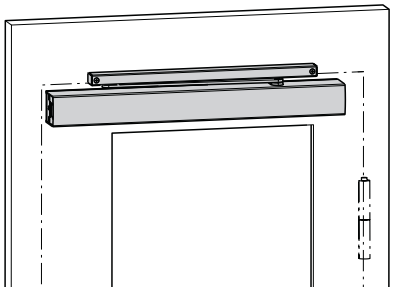

Door panel mounting opposite hinge side
with guide rail
max. soffit depth SD: 20 mm

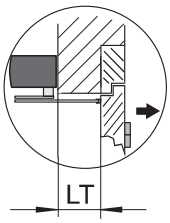

SD Soffit depth

8 Mounting

8.1 General information for mounting

- Observe all the instructions. Incorrect mounting can result in serious injuries.
- Observe the specified ambient temperature range at the installation location of the drive.
- After completing mounting check the settings and functionality of the drive!

8.1.1 Scope of delivery and completeness

▶ Open all the packaging units. Check whether they are complete and familiarise yourself with the parts.

ECturn door drive with guide rail or link arm

- Drive unit
  - 1 drive
  - 1 set of fastening screws

Depending on order:

- Slide rail
  - 1 rail
  - 1 lever
  - 1 set of fastening screws

or

- Link arm (size depending on soffit depth)
  - 1 set of fastening screws

- Accessories (optional)
  - Hood
  - Actuation elements: in accordance with the specifications in the wiring diagram
  - Door stop buffer
  - Mounting plate(s) with a set of fastening screws
  - Battery
  - Radio circuit board DCU702
  - Door transmission cable

8.1.2 Preparations to be made by the customer

Checking of the location conditions and the required physical conditions

WARNING!
Danger of injury through falling components!
Unsecured components may fall down when under load.

▶ When mounting the ECturn swing door drive ensure that the substructure ensures safe fastening of the drive.
▶ Use suitable means of fastening such as anchors, rivet nuts, etc.

▶ Before mounting the drive check whether the door leaf is in a good mechanical state and can be opened and closed easily.
▶ Mount the bottom edge of the element mounted at the lowest point (guide rail or link arm) at least 2 m above the floor.
▶ Lay cables in accordance with the cable plan.
▶ Check the planned type of stop on the leaf or frame profile (see Chapter 7).

8.2 Mounting dimensions for the types of mounting

8.2.1 Transom mounting hinge side with guide rail

Fixing with mounting plate

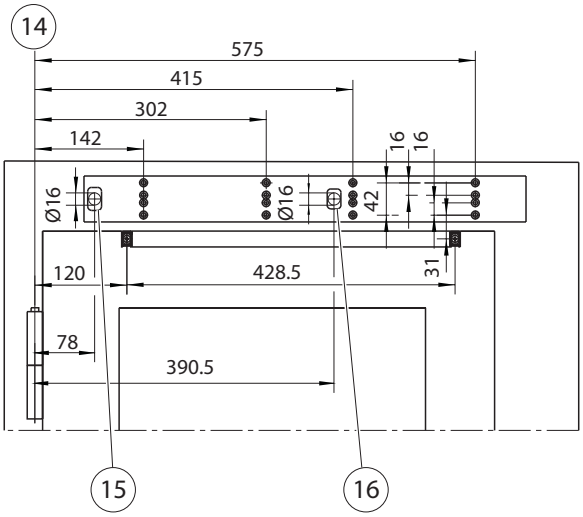

Direct fixing

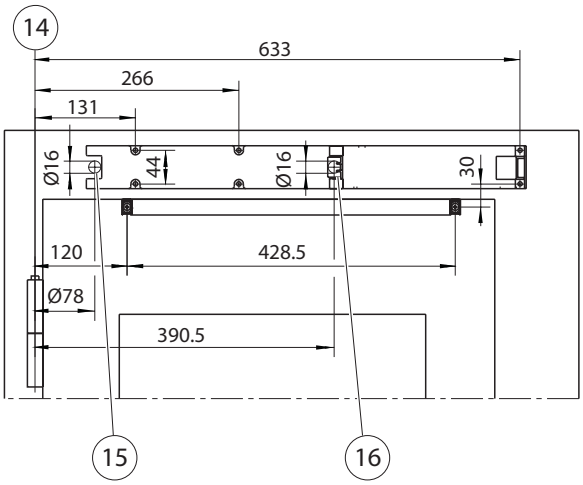

14 Dimensional reference hinge middle
15 Cable entry for power supply cable
16 Cable entry for control cables

▶ Observe drilling template: DIN left and DIN right mirrored.

Fastening means

- Mounting plate M5
- Base plate M5 or chip board screws
- Guide rail M5 or chip board screws

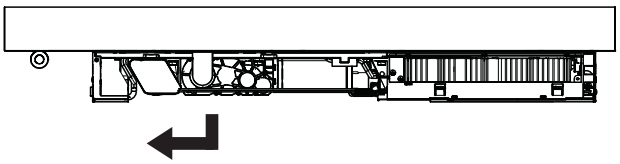

▶ Take drive orientation into account: Motor towards hinge.

Required space

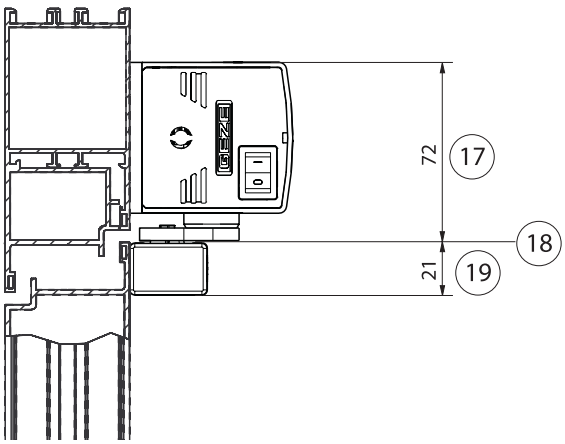

17 ECturn required space
18 Dimensional reference top edge door profile = Top edge guide rail
19 Required space for guide rail

8.2.2 Transom mounting opposite hinge side with guide rail

Fixing with mounting plate

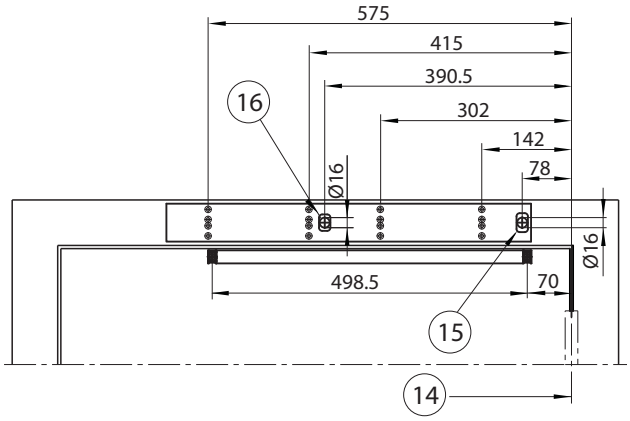

Direct fixing

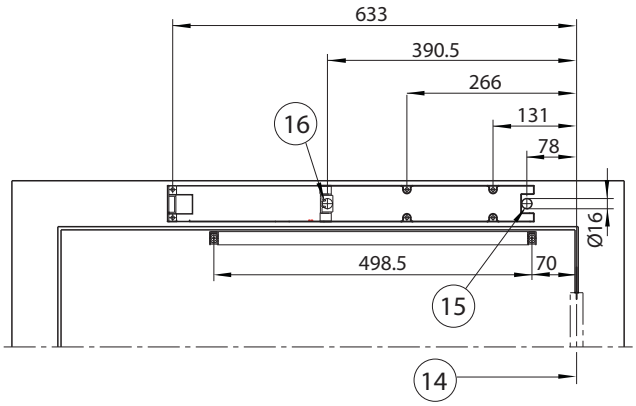

14 Dimensional reference hinge middle
15 Cable entry for power supply cable
16 Cable entry for control cables

- ▶ Observe drilling template: DIN left and DIN right mirrored.

Fastening means

- Mounting plate M5
- Base plate M5 or chip board screws
- Guide rail M5 or chip board screws

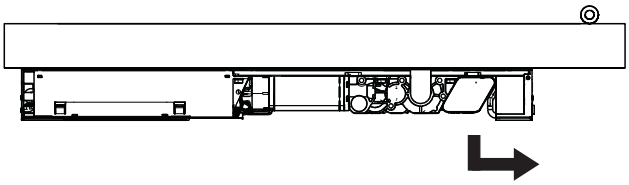

- ▶ Take drive orientation into account: Motor towards hinge.

Required space

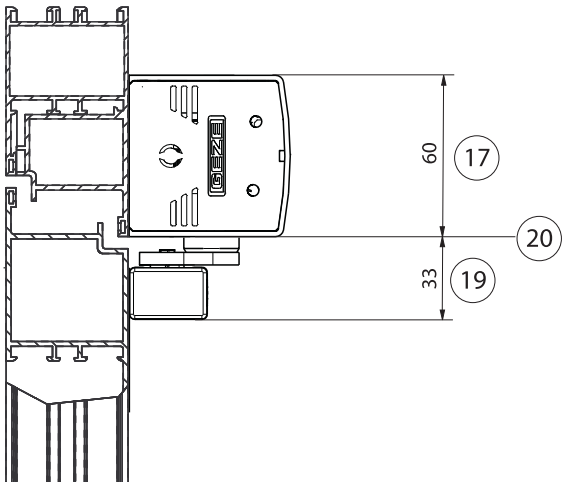

17 ECturn required space
19 Required space for guide rail
20 Dimensional reference bottom edge frame (lintel)

8.2.3 Transom mounting opposite hinge side with link arm

Fixing with mounting plate

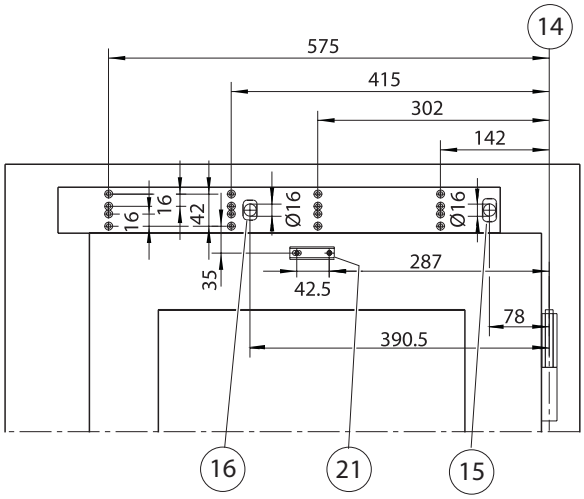

Direct fixing

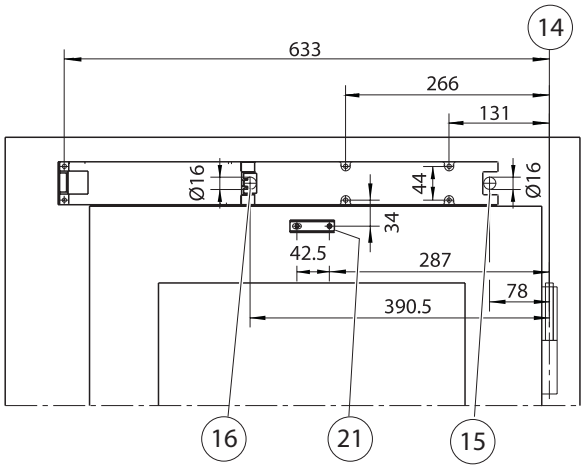

14 Dimensional reference hinge middle
15 Cable entry for power supply cable
16 Cable entry for control cables
21 For mounting dimensions of the link arm refer to the "ECturn link arm mounting instructions" (134590)

▶ Observe drilling template: DIN left and DIN right mirrored.

Fastening means

- Mounting plate M5
- Base plate M5 or chip board screws

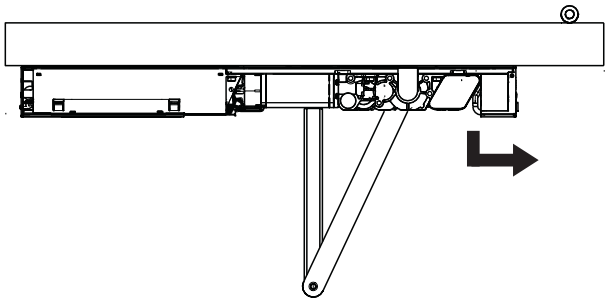

▶ Take drive orientation into account: Motor towards hinge.

Required space

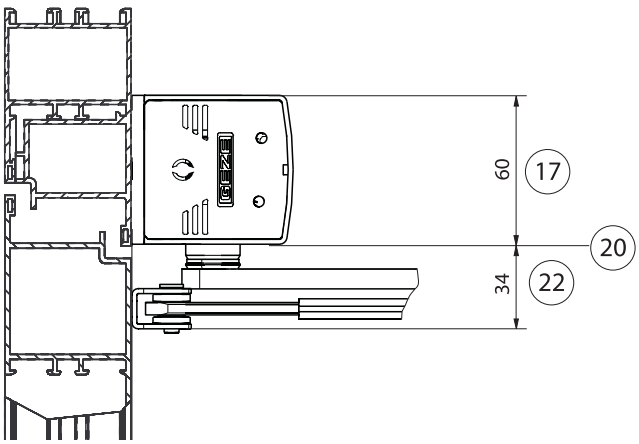

17 ECturn required space
20 Dimensional reference bottom edge frame (lintel)
22 Space required link arm

8.2.4 Door panel mounting hinge side with link arm

Fixing with mounting plate

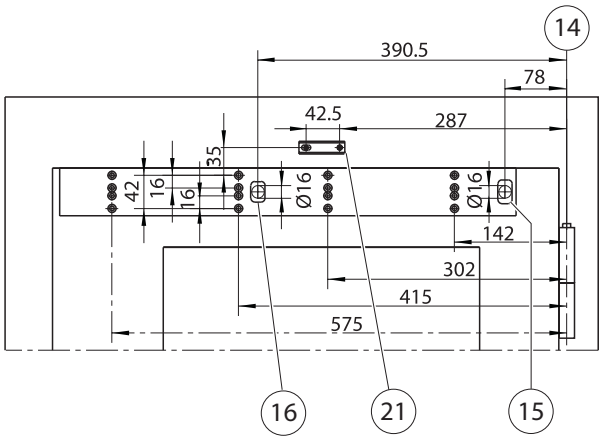

Direct fixing

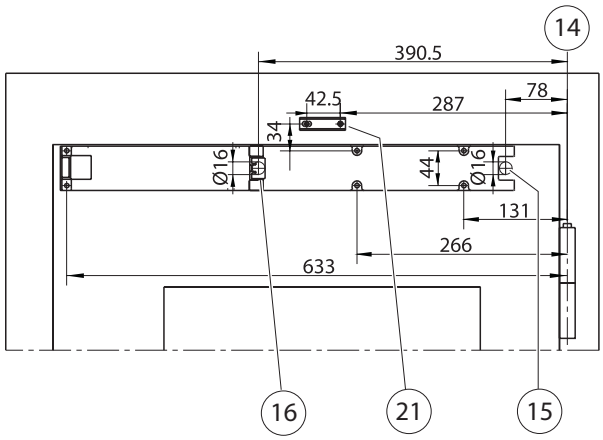

14 Dimensional reference hinge middle
15 Cable entry for power supply cable
16 Cable entry for control cables
21 For mounting dimensions of the link arm refer to the "ECturn link arm mounting instructions" (134590)

▶ Observe drilling template: DIN left and DIN right mirrored.

Fastening means

- Mounting plate M5
- Base plate M5 or chip board screws

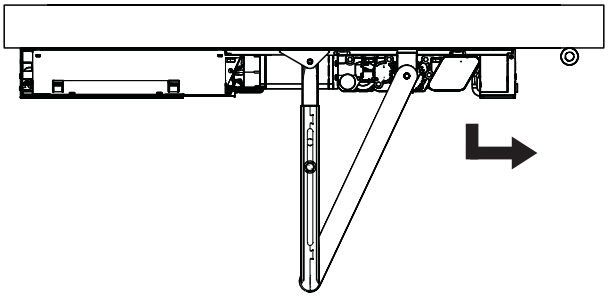

▶ Take drive orientation into account: Motor towards hinge.

Required space

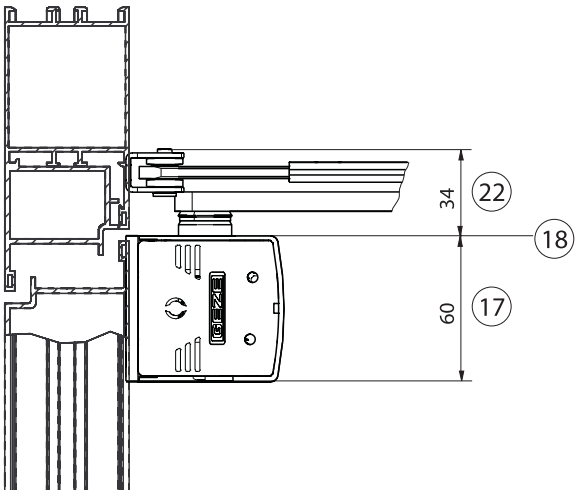

17 ECturn required space
18 Dimensional reference top edge door profile
22 Space required link arm

8.2.5 Door panel mounting hinge side with guide rail

Fixing with mounting plate

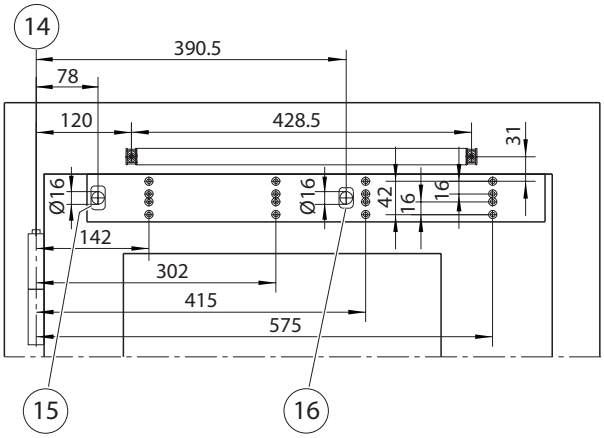

Direct fixing

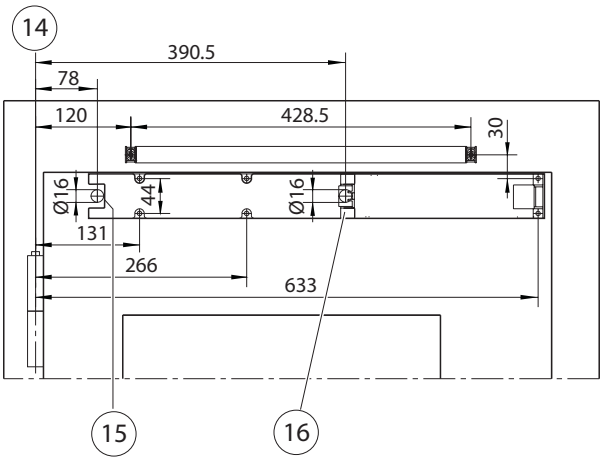

14 Dimensional reference hinge middle
15 Cable entry for power supply cable
16 Cable entry for control cables

- ▶ Observe drilling template: DIN left and DIN right mirrored.

Fastening means

- Mounting plate M5
- Base plate M5 or chip board screws
- Guide rail M5 or chip board screws

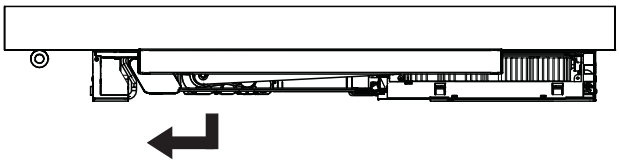

- ▶ Take drive orientation into account: Motor towards hinge.

Required space

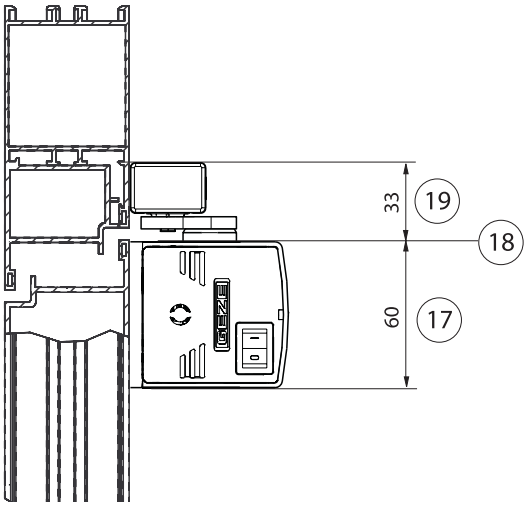

17 ECturn required space
18 Dimensional reference top edge door profile
19 Required space for guide rail

8.2.6 Door panel mounting opposite hinge side with guide rail

Fixing with mounting plate

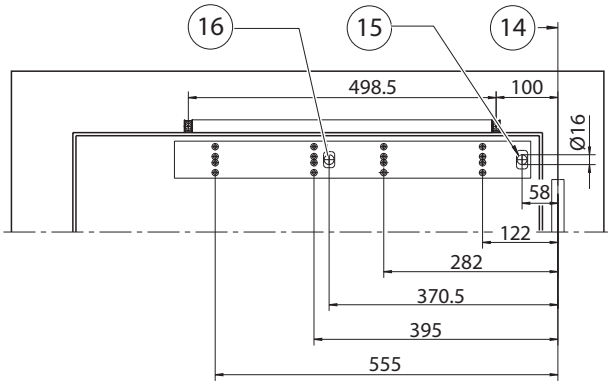

Direct fixing

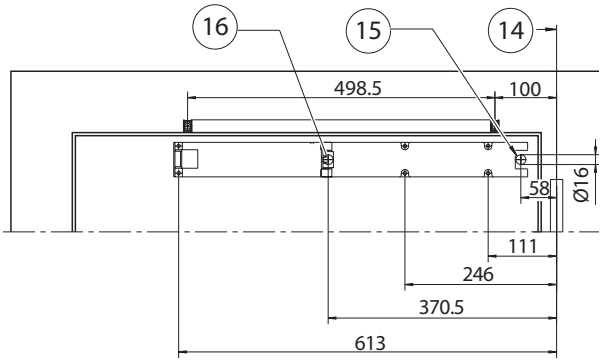

14 Dimensional reference hinge middle
15 Cable entry for power supply cable
16 Cable entry for control cables

▶ Observe drilling template: DIN left and DIN right mirrored.

Fastening means

- Mounting plate M5
- Base plate M5 or chip board screws
- Guide rail M5 or chip board screws

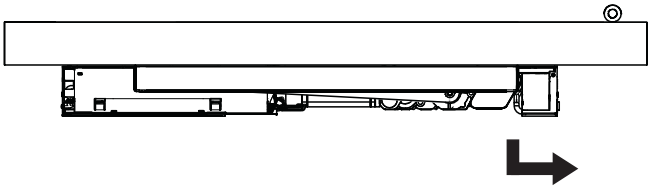

▶ Take drive orientation into account: Motor towards hinge.

Required space

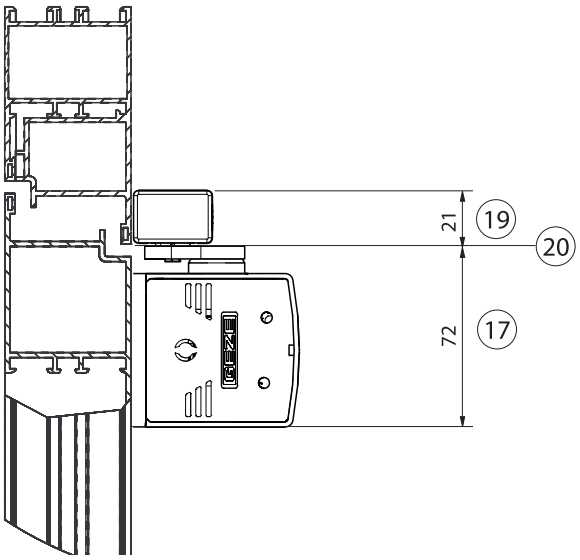

17 ECturn required space
19 Required space for guide rail
20 Dimensional reference bottom edge frame (lintel)

8.3 Mounting the drive

- ▶ During mounting ensure that the connection cables are not pinched.

- ▶ Pull the hood off.
- ▶ If necessary, screw on the mounting plate.
- ▶ Screw on the drive.
  For positioning refer to the top view in the drawings of Chapter 8.2.
- ▶ Break out the plastic part in the hood for the spindle.
- ▶ Mount the spindle cover.
- ▶ Fill in the information plate and stick it clearly visible onto the drive unit.
- ▶ Attach the hood.

- ▶ Use the supplied M5 screws or chip board screws.

8.4 Mounting the guide rail

8.4.1 Mounting the lever

- ▶ In order to mount the lever use only the supplied hexagon socket-head screw with coating in the lower thread section!

8.4.2 Mounting the guide rail

- ▶ Observe the mounting instructions for the guide rail.

The slide block can be clipped out of the lever for dismantling.

Transom mounting guide rail

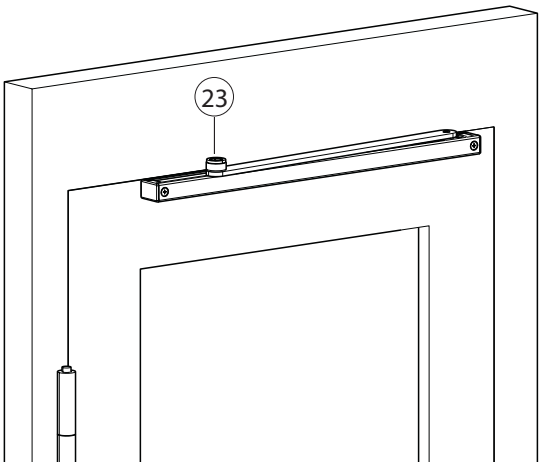

Door panel mounting guide rail

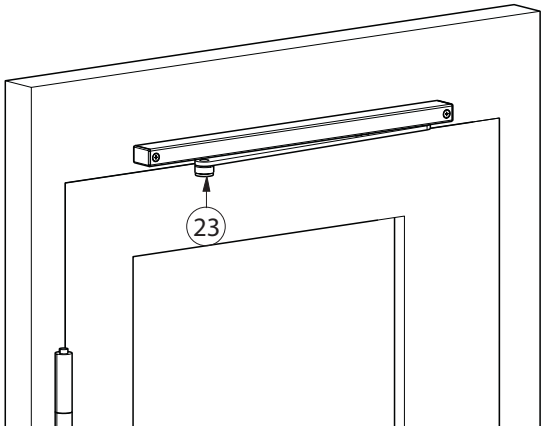

- ▶ Screw in the hexagon socket-head screw (23) and tighten it (tightening torque 15 Nm).

8.5 Mounting the link arm

- ▶ Observe the mounting instructions in the link arm packaging.

8.6 Door stop limiting

- When mounting the door panel take care of the pinch and shearing points of the door edges when laying the cables!

- Use the guide rail only with and integrated buffer or use a stop buffer on the floor.

- Use the link arm only with a stop buffer on the floor.

- Check the physical conditions.
- Open and close the door manually.
- Mount the stop buffer (24) on the floor.

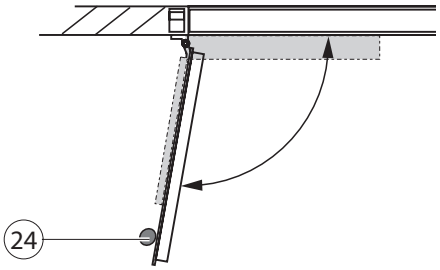

8.7 Mounting and connecting the battery

- Screw on the battery (4) using 2 screws (25).

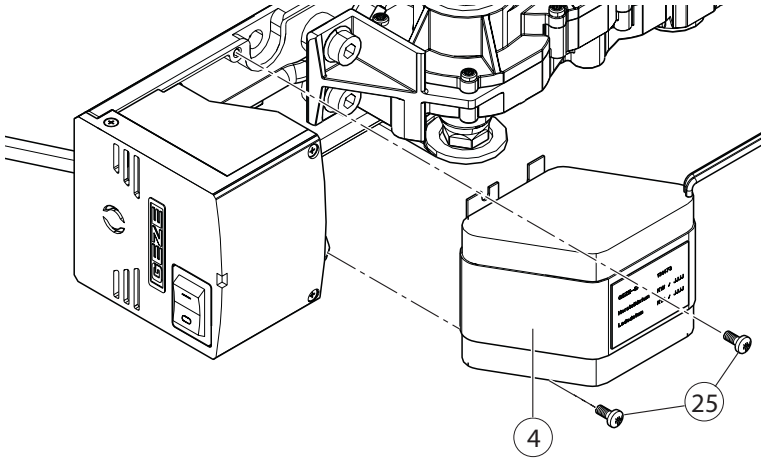

- Plug the plug (26) into the slot.

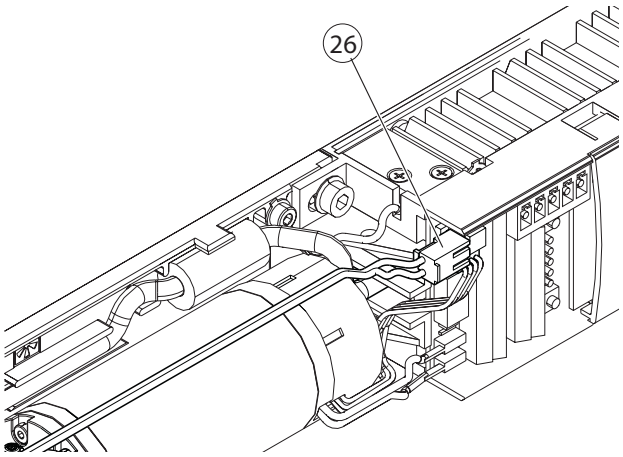

8.8 Mounting the door transmission cable (optional)

- Loosen bolts (27).
- Remove the cover (28) for the side element.
- Break out the breaking point (29) in the cover (28).

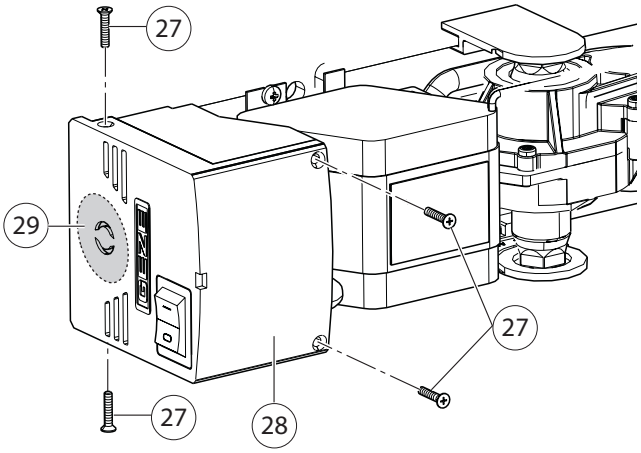

- Unscrew the nut (31) at the door transmission cable (30).
- Thread the door transmission cable (30) through the cover (28).
- Screw the nut (31) tight in the cover (28).

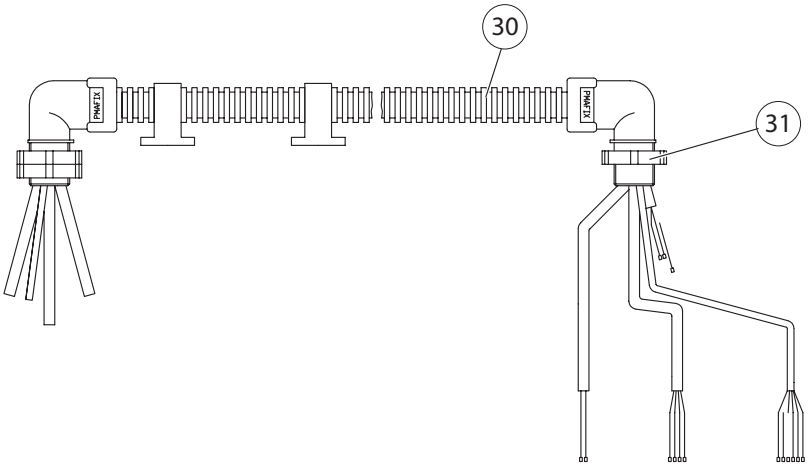

- Loosen the strain relief (33).
- Loosen the screw (34) and pull off the protective conductor.
- Loosen the cable at the terminal strip (35).
- Remove the power plug (32) with cable.

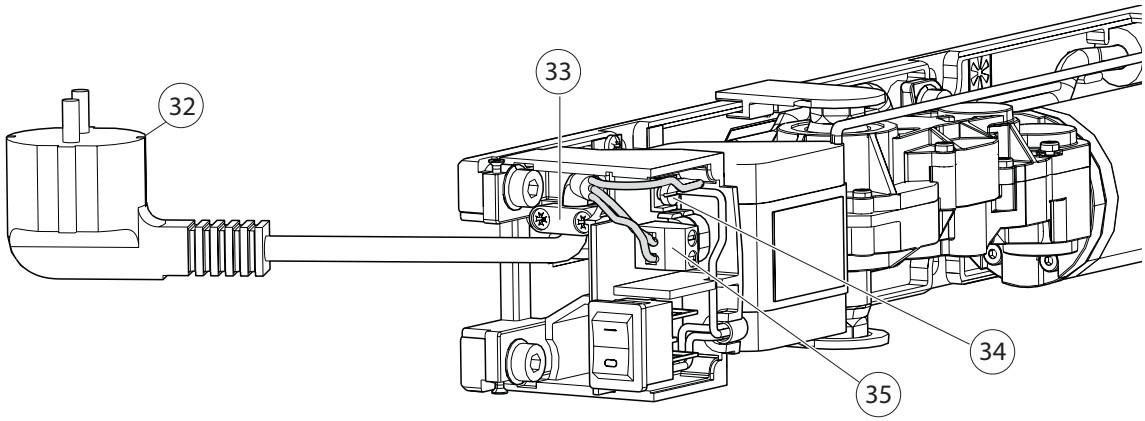

- Connect the door transmission cable in the terminal strip (35) in accordance with the wiring diagram.
- Connect the protective conductor and secure with screw (34).
- Place on the cover (28) for the side element.
- Tighten screws (27).

8.9 Mounting the hood (optional)

- During mounting ensure that cables are not pinched.

- Slide the hood (36) over the ECturn until it latches in audibly. Take the position of the drive axle of the motor-gearing unit into account.

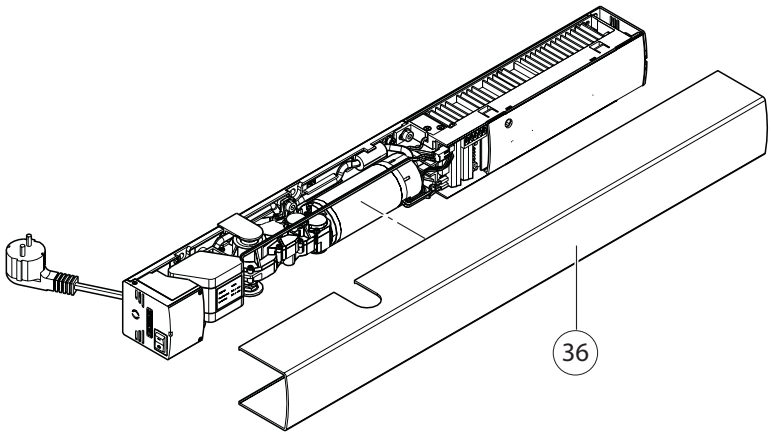

8.10 Mounting the actuation sensors

Sensors mounted on the wall or ceiling have to be positioned so that the door does not move through the field of detection of the sensor during opening and closing since self-actuation is otherwise possible.
For electrical connections, see the wiring diagram.

8.11 Mounting the radio circuit board (optional)

- Observe the mounting instructions in the packaging of the radio circuit board DCU702.

9 Electrical connection

9.1 Mains connection

The ECturn swing door drive is provided with a power plug in the factory. If there are cables provided by the customer and connection is not carried out with the power plug, the power connection has to be carried out by a qualified electrician.

WARNING!
Danger of fatal injury through electric shock when connecting the ECturn swing door drive without a power plug.
- The electrical system (230 V) may only be connected by a qualified electrician!
  Observe the VDE regulations.
- Use suitable means of fastening such as anchors, rivet nuts, etc.

- ▶ When mounting the door panel take care of the pinch and shearing points of the door edges when laying the cables!
- ▶ Before working on the electrical system, disconnect the system from the mains network.
- ▶ If it exists, unplug the battery.
- ▫ In accordance with the valid regulations it must be possible to deenergize the door drive at a suitable point.
- ▶ In the case of a fixed connection by the customer, provide an all-pole disconnecting device.
- ▶ If flexible cables are used, always use insulated wire-end ferrules.

▶ Plug in the power plug (32).

If there are cables provided by the customer and connection is not carried out with the power plug:

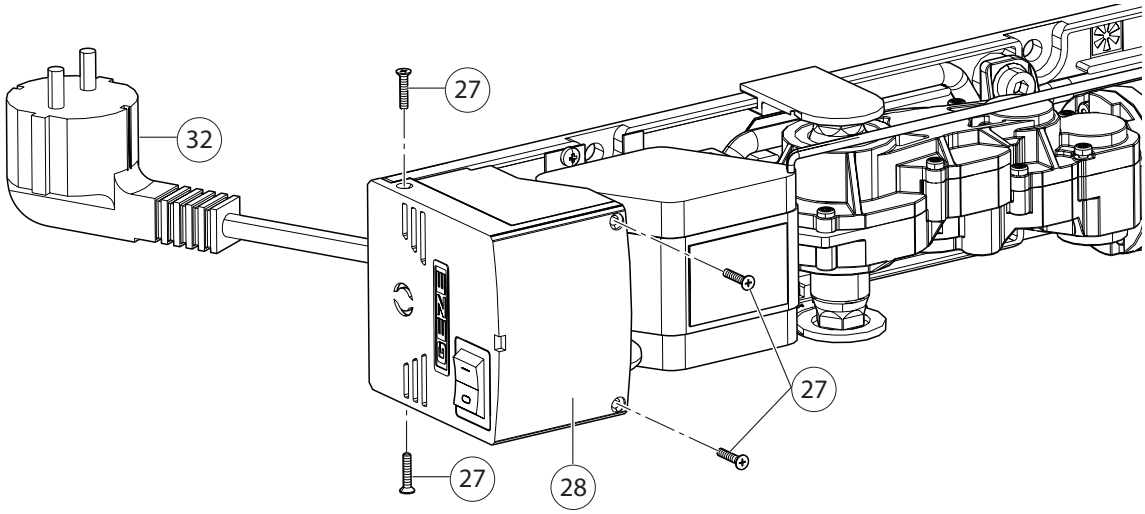

- ▶ Loosen bolts (27).
- ▶ Remove the cover (28) for the side element.

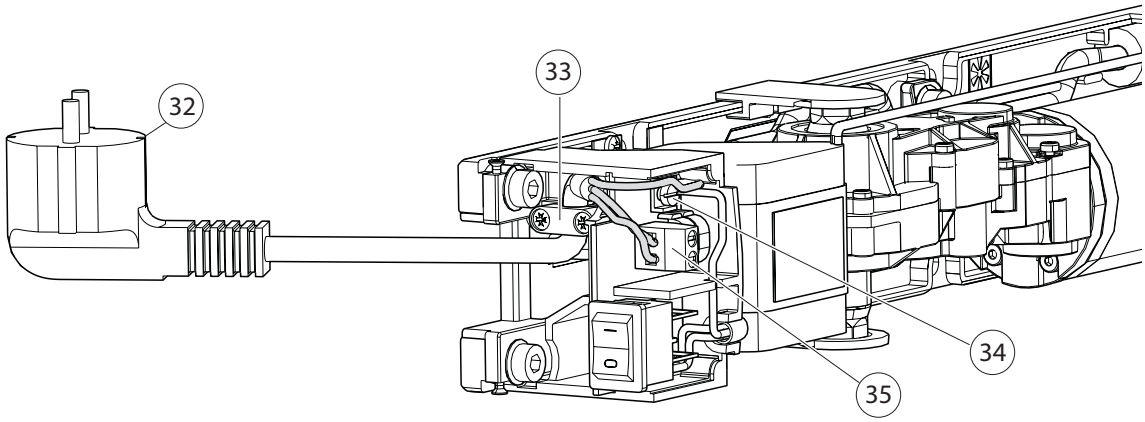

- ▶ Loosen the strain relief (33).
- ▶ Loosen the screw (34) and pull off the protective conductor.
- ▶ Loosen the cable at the terminal strip (35).
- ▶ Remove the power plug (32) with cable.
- ▶ Connect the 230 V power cable in the terminal strip (35) in accordance with the wiring diagram.
- ▶ Connect the protective conductor and secure with screw (34).

The sheath of the power supply cable must be laid to the strain relief (33).

- ▶ Tighten the strain relief (33).
- ▶ Place on the cover (28) for the side element.
- ▶ Tighten screws (27).

10 Maintenance

The following prescribed maintenance work at the ECturn must be carried out at least once a year by properly trained personnel.

10.1 Dangers during mechanical service

WARNING!
Danger of fatal injury via electric shock!
- Disconnect the power supply from the drive by a disconnecting device supplied by the customer and secure it against reactivating.

WARNING!
Danger of injury through crushing!
- When working on the drive ensure that you cannot be injured by swing movements of the lever or of the link arm.

WARNING!
Danger of getting burnt through hot motor!
The motor in the drive can have relatively high temperatures after continuous operation or poor ease of movement or other defects.
- If necessary, switch off the power supply and first let the motor cool down before carrying out work.

10.2 Maintenance work

The ECturn is free of maintenance to a great extent. The following work has to be carried out during maintenance:
- Inspect fastening screws for firm seating.
- Tighten the fastening screw for the link arm or roller lever.
- Clean the inside of the roller guide rail.
- Check that the door latch functions correctly and is clean, oil lightly if necessary.
- Check the roller lever or the link arm for damage, replace if necessary.

Carrying out a manual trial run
Requirements:
The drive has been disconnected at all poles from the power supply.

- Ensure that the door moves properly.
- Check that the mounting is correct.
- Switch the power supply back on or plug the power plug back on.

10.3 Electrical servicing

- Keep the test documents up-to-date and make them available.
- With DPS: In the menu item SA query
  - the number of openings (CO),
  - the operating hours (HO) and
  - service (SO) and document them in the maintenance manual.
- After completing the maintenance work, always execute the Learning function for the ECturn (see Section 10.2).
- Check the functioning of the actuating and presence sensors and replace if necessary.
- Direct querying of the controller using S1, S2:
  - Refer to the wiring diagram, Commissioning and servicing chapter as well as Parameter menu service LEDs and display programme switch chapter.

10.4 Electrical faults

Fault messages are stored and can be displayed on the display programme switch.
If a fault is currently active, it is shown every 10 seconds on the display programme switch.
If the dot lights up in the left half of the display programme switch, the system was unable to completely initialise after being switched on. Either there is an obstruction or something in the system itself has become jammed.
The dot extinguishes as soon as the door has been opened completely and closed again once.

For troubleshooting and elimination: see fault table in the wiring diagram, "Fault messages" section.

11 Disposal

- When disposing of the door system, separate the different materials and have them recycled.

Germany
GEZE Sonderkonstruktionen GmbH
Planken 1
97944 Boxberg-Schweigern
Tel. +49 (0) 7930-9294-0
Fax +49 (0) 7930-9294-10
E-Mail: sk.de@geze.com

Germany
GEZE GmbH
Niederlassung Nord/Ost
Bühringstraße 8
13086 Berlin (Weissensee)
Tel. +49 (0) 30-47 89 90-0
Fax +49 (0) 30-47 89 90-17
E-Mail: berlin.de@geze.com

Germany
GEZE GmbH
Niederlassung West
Nordsternstraße 65
45329 Essen
Tel. +49 (0) 201-83082-0
Fax +49 (0) 201-83082-20
E-Mail: essen.de@geze.com

Germany
GEZE GmbH
Niederlassung Mitte
Adenauerallee 2
61440 Oberursel (b. Frankfurt)
Tel. +49 (0) 6171-63610-0
Fax +49 (0) 6171-63610-1
E-Mail: frankfurt.de@geze.com

Germany
GEZE GmbH
Niederlassung Süd
Breitwiesenstraße 8
71229 Leonberg
Tel. +49 (0) 7152-203-594
Fax +49 (0) 7152-203-438
E-Mail: leonberg.de@geze.com

Germany
GEZE Service GmbH
Reinhold-Vöster-Straße 25
71229 Leonberg
Tel. +49 (0) 7152-9233-0
Fax +49 (0) 7152-9233-60
E-Mail: service-info.de@geze.com

Germany
GEZE Service GmbH
Niederlassung Berlin
Bühringstraße 8
13086 Berlin (Weissensee)
Tel. +49 (0) 30-470217-30
Fax +49 (0) 30-470217-33
E-Mail: service-info.de@geze.com

Austria
GEZE Austria GmbH
Wiener Bundesstrasse 85
5300 Hallwang b. Salzburg
Tel. +43-(0)662-663142
Fax +43-(0)662-663142-15
E-Mail: austria.at@geze.com

Baltic States
GEZE GmbH Baltic States office
Dzelzavas iela 120 S
1021 Riga
Tel. +371 (0) 67 89 60 35
Fax +371 (0) 67 89 60 36
E-Mail: office-latvia@geze.com

Benelux
GEZE Benelux B.V.
Leemkuil 1
Industrieterrein Kapelbeemd
5626 EA Eindhoven
Tel. +31-(0)40-26290-80
Fax +31-(0)40-26 290-85
E-Mail: benelux.nl@geze.com

Bulgaria
GEZE Bulgaria - Trade
Representative Office
61 Pirinski Prohod, entrance „B“,
4th floor, office 5,
1680 Sofia
Tel. +359 (0) 24 70 43 73
Fax +359 (0) 24 70 62 62
E-Mail: office-bulgaria@geze.com

China
GEZE Industries (Tianjin) Co., Ltd.
Shuangchenzhong Road
Beichen Economic Development
Area (BEDA)
Tianjin 300400, P.R. China
Tel. +86(0)22-26973995-0
Fax +86(0)22-26972702
E-Mail: Sales-info@geze.com.cn

China
GEZE Industries (Tianjin) Co., Ltd.
Branch Office Shanghai
Unit 25N, Cross Region Plaza
No. 899, Ling Ling Road,
XuHui District
200030 Shanghai, P.R. China
Tel. +86 (0)21-523 40 960
Fax +86 (0)21-644 72 007
E-Mail: chinasales@geze.com.cn

China
GEZE Industries (Tianjin) Co., Ltd.
Branch Office Guangzhou
Room 17C3
Everbright Bank Building, No.689
Tian He Bei Road
510630 Guangzhou, P.R. China
Tel. +86(0)20-38731842
Fax +86(0)20-38731834
E-Mail: chinasales@geze.com.cn

China
GEZE Industries (Tianjin) Co., Ltd.
Branch Office Beijing
Room 1001, Tower D
Sanlitun SOHO
No. 8, Gongti North Road,
Chaoyang District,
100027 Beijing, P.R.China
Tel. +86-(0)10-5935 9300
Fax +86-(0)10-5935 9322
E-Mail: chinasales@geze.com.cn

China
GEZE Industries (Tianjin) Co., Ltd.
Branch Office Singapore
21, Bukit Batok Crescent,
No. 23-75, Wcega Tower,
Singapore 658065
Tel. +65-6846 1338
Fax +65-6846 9353
E-Mail: gezesea@geze.com.sg

France
GEZE France S.A.R.L.
ZAC de l'Orme Rond
RN 19
77170 Servon
Tel. +33-(0)1-606260-70
Fax +33-(0)1-606260-71
E-Mail: france.fr@geze.com

Hungary
GEZE Hungary Kft.
Bartók Béla út 105-113.
Budapest
H-1115
Tel. +36 (1) 481 4670
Fax +36 (1) 481 4671
E-Mail: office-hungary@geze.com

Iberia
GEZE Iberia S.R.L.
Pol. Ind. El Pla
C/Comerc, 2-22, Nave 12
08980 Sant Feliu de Llobregat (Barcelona)
Tel. +34 9-02 19 40 36
Fax +34 9-02 19 40 35
E-Mail: info@geze.es

India
GEZE India Private Ltd.
MF2 & 3, Guindy Industrial Estate
Ekkattuthangal
Chennai - 600 097
Tamilnadu
Tel. +91 (0) 44 30 61 69 00
Fax +91 (0) 44 30 61 69 01
E-Mail: office-india@geze.com

Italy
GEZE Italia Srl
Via Giotto, 4
20040 Cambiago (MI)
Tel. +3902950695-11
Fax +3902950695-33
E-Mail: italia.it@geze.com

Italy
GEZE Engineering Roma Srl
Via Lucrezia Romana, 91
00178 Roma
Tel. +3906-7265311
Fax +3906-72653136
E-Mail: roma@geze.biz

Kazakhstan
GEZE Central Asia
050061, Almaty, Kasakhstan
Rayimbek ave. 348, A, office 310
Tel. +7 (0) 72 72 44 78 03
Fax +7 (0) 72 72 44 78 03
E-Mail: office-kazakhstan@geze.com

Poland
GEZE Polska Sp.z o.o.
ul. Annopol 21
03-236 Warszawa
Tel. +48 (0)22 440 4 440
Fax +48 (0)22 440 4 400
E-Mail: geze.pl@geze.com

Romania
GEZE Romania S.R.L.
IRIDE Business Park
Building nr. 10, level 2
Str. Dimitrie Pompei nr. 9–9a
RO-020335 Bucharest, sector 2
Tel. +40 (0) 316 201 257
Fax +40 (0) 316 201 258
E-Mail: office-romania@geze.com

Russian Federation
GEZE GmbH Representative
Office Russia
Gamsonovskiy Per. 2
115191 Moskau
Tel. +7 (0) 495 933 06 59
Fax +7 (0) 495 933 06 74
E-Mail: office-russia@geze.com

Scandinavia
GEZE Scandinavia AB
Mallslingan 10
Box 7060
18711 Täby, Sweden
Tel. +46(0)8-7323-400
Fax +46(0)8-7323-499
E-Mail: sverige.se@geze.com

Scandinavia
GEZE Norway
Industriveien 34 B
2072 Dal
Tel. +47(0)639-57200
Fax +47(0)639-57173
E-Mail: norge.se@geze.com

Scandinavia
GEZE Finland
Postbox 20
15871 Hollola
Tel. +358(0)10-4005100
Fax +358(0)10-4005120
E-Mail: finland.se@geze.com

Scandinavia
GEZE Denmark
Mårkærvej 13 J-K
2630 Taastrup
Tel. +45(0)46-323324
Fax +45(0)46-323326
E-Mail: danmark.se@geze.com

South Africa
DCLSA Distributors (Pty.) Ltd.
118 Richards Drive, Midrand,
Halfway House Ext. 111
P.O. Box 7934
Midrand 1685
Tel. +27(0)113158286
Fax +27(0)113158261
E-Mail: info@dclsa.co.za

Switzerland
GEZE Schweiz AG
Bodenackerstrasse 79
4657 Dulliken
Tel. +41-(0)62-2855400
Fax +41-(0)62-2855401
E-Mail: schweiz.ch@geze.com

Turkey
GEZE GmbH Türkiye - İstanbul
İrtibat Bürosu
Ataşehir Bulvarı, Ata 2/3
Plaza Kat: 9 D: 84 Ataşehir
Kadıköy / İstanbul
Tel. + 90 (0) 21 64 55 43 15
Fax + 90 (0) 21 64 55 82 15
E-Mail: office-turkey@geze.com

Ukraine
Repräsentanz GEZE Ukraine TOV
ul. Viskoznaya, 17, building 93-B,
office 12
02094 Kiev
Tel. +38 (0) 44 501 22 25
Fax +38 (0) 44 499 77 25
E-Mail: office-ukraine@geze.com

United Arab Emirates/GCC
GEZE Middle East
P.O. Box 17903
Jebel Ali Free Zone
Dubai
Tel. +971(0)4-8833112
Fax +971(0)4-8833240
E-Mail: geze@emirates.net.ae

United Kingdom
GEZE UK Ltd.
Blenheim Way
Fradley Park
Lichfield
Staffordshire WS13 8SY
Tel. +44(0)1543443000
Fax +44(0)1543443001
E-Mail: info.uk@geze.com

GEZE GmbH
P.O.Box 1363
Reinhold-Vöster-Straße 21–29
71229 Leonberg
Germany

Tel.: 0049 7152 203-0
Fax: 0049 7152 203-310
www.geze.com

Der Maßstab DIN ISO 9001 unseres Handelns

135859-02

GEZE